University of Baghdad

Al-Khwarizmi College of Engineering

Department of Information and Communication Engineering

SMART WALLET CARD SYSTEM FOR UNIVERSITY OF BAGHDAD

Submitted by:

Ammar Nazar

Amjed Oday

Osamah Nazeeh

Abdullah Hussein

Hussein Enad

Supervisor: Mr. Tariq Emad

Academic Year: 2024–2025

Date of Submission: 5/5/2025

Table of Contents

1. Chapter 1: Introduction 4
2. Chapter 2: Literature Review 6
3. Chapter 3: Methodology 9
4. Chapter 4: Implementation and Results 12
5. Chapter 5: Conclusion and Future Work 16
6. References 19
7. Appendices 19

List of Figures

- Figure 1: Flowchart of transaction & payment operatio..... 11
- Figure 2: Hardware Wire connection..... 13
- Figure 3: screenshots of the mobile application.....14

List of Abbreviations

- NFC: Near Field Communication
- POS: Point of Sale
- LCD: Liquid Crystal Display
- ESP32: Espressif Systems Microcontroller
- UID: Unique Identifier
- PIN: Personal Identification Number

Abstract

The Smart Wallet Card System addresses limitations in the University of Baghdad's traditional payment and identification methods. Students and staff currently rely on cash for transportation and campus services, and manual ID checks at gates, causing delays and inefficiencies.

This project introduces a secure and user-friendly system that integrates ESP32-based smart cards, NFC, ultrasonic signaling, and a FlutterFlow mobile app with Supabase as the backend. It enables contactless payments and digital identity verification, with PIN input for high-value transactions.

A local server supports offline operation and syncs with the cloud when online. The system processes payments via a single `/update` endpoint that verifies credentials and updates balances. Testing showed successful operation in online and offline modes, accurate enforcement of bus capacity, and clear user feedback via LCD and buzzer.

The solution improves efficiency, reduces fraud, and enhances the campus experience. Its modular design supports future integration with access control and attendance systems. This project sets a foundation for smart campus solutions in Iraq and beyond.

Chapter 1: Introduction

Universities around the world are evolving into digitally connected ecosystems, yet many institutions—especially in developing regions—continue to rely on outdated manual systems for essential operations. At the University of Baghdad, services such as bus fare collection, cafeteria transactions, and campus gate entry are still handled using cash and physical ID cards. These legacy systems introduce numerous inefficiencies, such as long queues, difficulty in tracking payments, lack of transparency, and missed opportunities for data collection and process automation. In a time when digital transformation is critical, these challenges hinder operational flow and lower the student and staff experience.

The problem is particularly noticeable in the university's internal transportation system. Currently, students pay the bus driver directly in cash. This system not only leads to revenue leakage and overloading but also lacks any centralized method for tracking passengers or ensuring fair usage. Cafeteria and bookstore purchases face similar issues, with no integration between payment and identity. Manual ID checks at university gates are time-consuming and vulnerable to error or impersonation. These pain points collectively underline the urgent need for a unified digital solution.

The proposed solution is a Smart Wallet Card System—a compact, ESP32-based digital card supported by a mobile application and cloud backend. The card uses NFC technology and ultrasonic communication to initiate transactions or identity verification. For transactions above a certain threshold, the system enforces PIN entry through a 4×4 keypad. Feedback is provided via an LCD screen, RGB LED, and buzzer. The card communicates with POS terminals operated by bus drivers and vendors, which are also based on ESP32 and connected to a local university server. This server handles offline transaction logging and synchronizes with the Supabase cloud database when internet is available. The mobile app, developed using

FlutterFlow, allows users to top-up their balance, view transaction history, and make ultrasonic payments directly.

What makes this system valuable is its modular and offline-first design. It ensures transaction processing even during connectivity loss—crucial in settings with unstable internet. It empowers administrators with live data and role-based access to services and reports. Students gain speed, convenience, and security in their daily interactions, while the university benefits from centralized control and transparency.

The primary objective of this project is to design, build, and validate a smart card system that streamlines payments, identity verification, and transportation on campus. Specific goals include:

- Replace cash-based transactions with digital NFC/ultrasonic options
- Support secure PIN-based authentication for large payments
- Enable real-time and offline syncing through local and cloud servers
- Integrate all services under one unified platform accessible via mobile app and card
- Create a scalable model for other universities in Iraq and beyond

This document is organized into several chapters. Chapter 2 provides a literature review summarizing related systems and existing work in smart ID and payment platforms. Chapter 3 details the methodology used to implement the system. Chapter 4 outlines the technical implementation and testing results. Chapter 5 concludes with key findings and future recommendations. Together, these chapters present a complete picture of how the Smart Wallet Card System was conceived, designed, and tested as a robust solution for modern university environments.

Chapter 2: Literature Review

The increasing demand for digital transformation in higher education has led to a growing body of research and implementation around smart identification systems and campus payment platforms. Universities globally have begun deploying digital ID solutions, NFC-enabled payment systems, and mobile apps to improve student experience and administrative efficiency. However, many existing models remain fragmented, overly dependent on continuous internet access, or constrained by proprietary technologies.

2.1 RFID and NFC-Based Campus Solutions

Traditional systems rely heavily on RFID and NFC cards for attendance tracking, building access, and basic identity verification. For example, the National University of Singapore and the University of Warwick have implemented RFID-based attendance and access solutions (Zhu et al., 2020). These systems streamline check-in processes but typically operate in silos, lacking integration with payment services. Moreover, most commercial NFC-based cards are tied to banking systems (e.g., Visa payWave or Mastercard PayPass), incurring high deployment costs and limited adaptability in low-connectivity environments.

2.2 Mobile Payment and Campus Wallets

Universities such as the University of Texas and Zhejiang University have experimented with campus wallet systems integrated into student mobile apps. These allow top-ups, balance checks, and transaction histories, often tied to university accounts or third-party payment processors (Li & Huang, 2021). However, these systems are typically dependent on stable internet access and are not designed for offline transactions. Additionally, many of these implementations are built on proprietary infrastructure, limiting flexibility for local customization.

2.3 Microcontroller-Based Access and Payment Systems

Recent research has shown the viability of using microcontrollers such as the ESP32 for handling secure payment and access control tasks. These devices are cost-effective, energy-efficient, and well-supported by open-source development communities. Projects like the Smart Gate Controller (Ahmed et al., 2022) and embedded vending machine controllers demonstrate ESP32's capability for real-time decision-making and peripheral communication.

2.4 Cloud Integration Platforms

Cloud tools like Firebase and Supabase have enabled lightweight, real-time database services with built-in authentication and role-based access control. Supabase in particular stands out for being open-source and self-hostable, allowing sensitive student data to remain under institutional control. Studies comparing Firebase and Supabase (Ramos & Patel, 2022) conclude that Supabase offers better transparency and backend extensibility for academic settings.

2.5 Gaps and Opportunity for Integration

Despite the maturity of the above technologies, few systems attempt to **combine digital identity and multi-modal payment** in a campus environment with **offline capability and scalable architecture**. Existing literature focuses either on payment or on access—but rarely both. Most do not support conditional logic (e.g., PIN entry above threshold amounts) or localized transaction logging with delayed cloud sync. These gaps indicate a clear opportunity for unified systems that combine smart card hardware, user-friendly mobile apps, secure cloud infrastructure, and offline connection.

The Smart Wallet Card System presented in this project builds on these foundations. By merging ESP32-powered NFC and ultrasonic communication, PIN-based security, FlutterFlow app integration, and Supabase backend services, it offers a cohesive platform tailored to the needs of universities in Iraq and similar environments. This

system not only bridges the identity-payment divide but also ensures operability in both connected and offline conditions.

References

Zhu, H., Lin, W., & Wong, T. (2020). "RFID-Based Student Attendance Management Systems in Universities: A Case Study from Singapore." *Journal of Educational Technology Development*, 18(2), 115–124.

Li, X., & Huang, Y. (2021). "Design and Deployment of Mobile Wallet Systems in Higher Education." *IEEE Transactions on Learning Technologies*, 14(1), 44–52.

Ahmed, M., Jassim, A., & Al-Shamary, B. (2022). "ESP32-Based Smart Gate Controller for Campus Access Management." *Iraqi Journal of Electrical and Electronic Engineering*, 18(1), 22–30.

Ramos, J., & Patel, N. (2022). "A Comparative Study on Firebase and Supabase for Educational Apps." *International Journal of Cloud Applications*, 9(4), 211–225.

Chapter 3: Methodology

This chapter outlines the methodology used to design, implement, and test the Smart Wallet Card System. The approach is divided into several key phases: system design, hardware development, mobile app integration, back-end services, and system testing. Each phase is described in detail to demonstrate how the proposed system was developed and validated.

3.1 System Overview

The project was structured around the concept of integrating embedded hardware with a modern mobile interface and a scalable backend. The Smart Wallet Card consists of an ESP32 microcontroller, an NFC reader (PN532), a 4x4 keypad, an I2C LCD, and a buzzer. This hardware combination enables users to authenticate themselves, enter a PIN when required, and receive instant feedback during transactions. The wallet card communicates with a POS terminal or a local server via Wi-Fi.

The mobile app, built using FlutterFlow, allows users to register, top up their balance using bank cards, and make payments via ultrasonic signals. The app also syncs transaction history with Supabase, which acts as the cloud-based backend managing user authentication, balance tracking, and data storage. The selection of these components was influenced by their affordability, compatibility, and support from open-source communities.

3.2 Hardware Design

The ESP32 microcontroller was chosen for its built-in Wi-Fi capabilities, low cost, and strong developer community. The PN532 NFC module enables reading user UID from contactless cards, a proven and secure method widely used in smart access systems. The keypad allows secure PIN input, required for transactions exceeding a configurable threshold (e.g., 1000 IQD), enhancing user security. An I2C LCD provides transaction prompts and confirmations, while the buzzer delivers real-time auditory feedback.

3.3 Software and Backend Integration

The mobile application was developed using FlutterFlow to ensure rapid prototyping, customizable UI, and compatibility across Android and iOS platforms. The app communicates with Supabase for real-time database operations and authentication. Data such as UID, transaction amount, and PIN are transmitted to a unified endpoint /update. This endpoint was designed to simplify and centralize the transaction process by handling validation, balance deduction, and response logic.

To address the challenge of unstable internet connectivity, a local server was incorporated into the system's architecture. The local server mimics the logic of the cloud backend and stores transaction logs until reconnection. Once internet access is restored, it syncs the local data with the Supabase cloud. This design ensures consistent user experience and operational continuity.

At the database level, Supabase stores information such as user profiles, card UIDs, encrypted PINs, transaction logs, and balance states. Supabase was used for schema design and testing. Supabase Functions are planned for handling asynchronous tasks like automated balance top-ups or daily sync logs.

3.4 Development Tools and Environments

- **Hardware IDE**: Arduino IDE for ESP32 firmware development
- **App Builder**: FlutterFlow for front-end app creation and logic linking
- **Backend Platform**: Supabase (PostgreSQL, Auth, Storage, Functions)
- **Local Server**: Python Flask HTTP server for handling offline sync and /update endpoint logic
- **Database Interface**: Supabase Studio for admin access, testing, and role management

3.5 Testing Procedures

The system was tested through a series of real-world scenarios designed to evaluate each component both individually and in an integrated manner:

- NFC card scanning and ultrasonic payment signal decoding
- PIN authentication flow, including incorrect and correct entries
- Offline transaction queueing and eventual cloud synchronization
- User experience evaluations of LCD messages, buzzer timing, and response speed

Each test was run under different network conditions verify system robustness and fault tolerance. Transactions were observed in both standalone card-to-POS environments and mobile-to-mobile setups. Errors were logged and analyzed to improve resilience and usability.

This methodology ensured the development of a reliable, scalable Smart Wallet Card System suited for deployment in university campuses. And the following figure 1 shows the flowchart of operations of transaction and card payment.

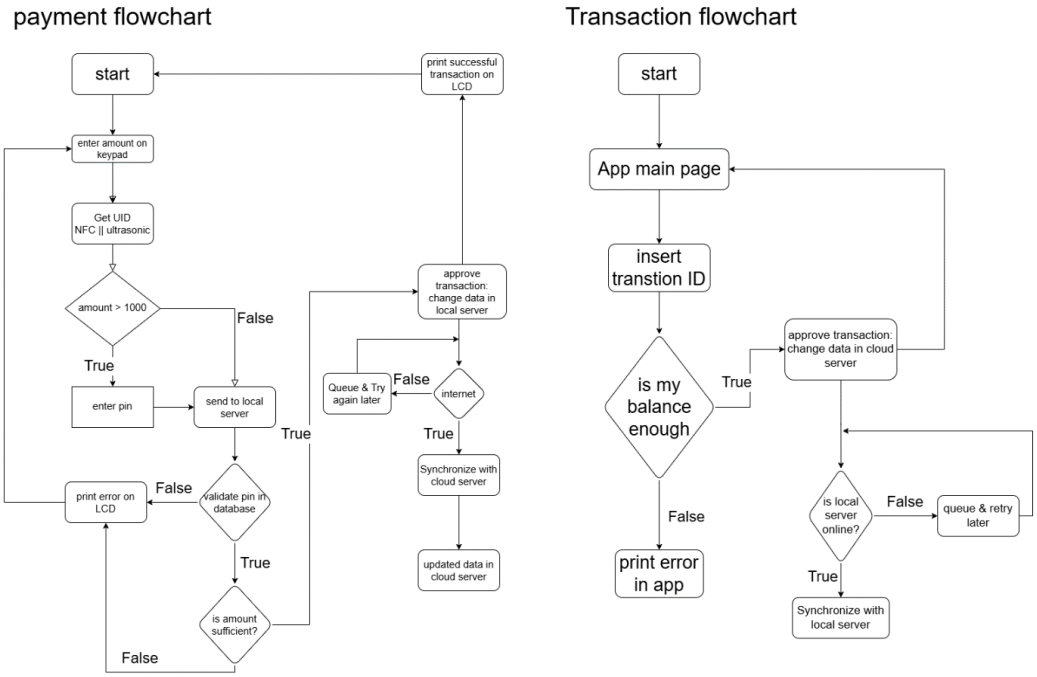

Fig 1: Flowchart of transaction & payment operation

Chapter 4: Implementation and Results

This chapter describes the practical implementation of the Smart Wallet Card System and the results obtained from testing and real-world evaluation. It highlights how each component was developed and integrated, and presents the outcomes of functional and performance tests.

4.1 Hardware Implementation

The Smart Wallet Card was assembled using the ESP32 microcontroller as the core. It connects to the PN532 NFC module to read NFC card UIDs and supports ultrasonic signal decoding for app-based payments. The 4x4 keypad allows PIN entry for transactions exceeding the set threshold. An I2C LCD displays user prompts and confirmations, while an RGB LED and buzzer provide visual and auditory feedback during each transaction.

The POS terminal, also based on ESP32, was configured for two operating modes:

- **Fixed mode** for internal buses, where the fare is constant and passenger limit enforcement is applied.
- **Variable mode** for cafeterias and shops, where the price is input manually by the vendor.

Both POS variants send payment requests to the local server.

Check the following (fig 2) to understand connectivity of hardware componenets

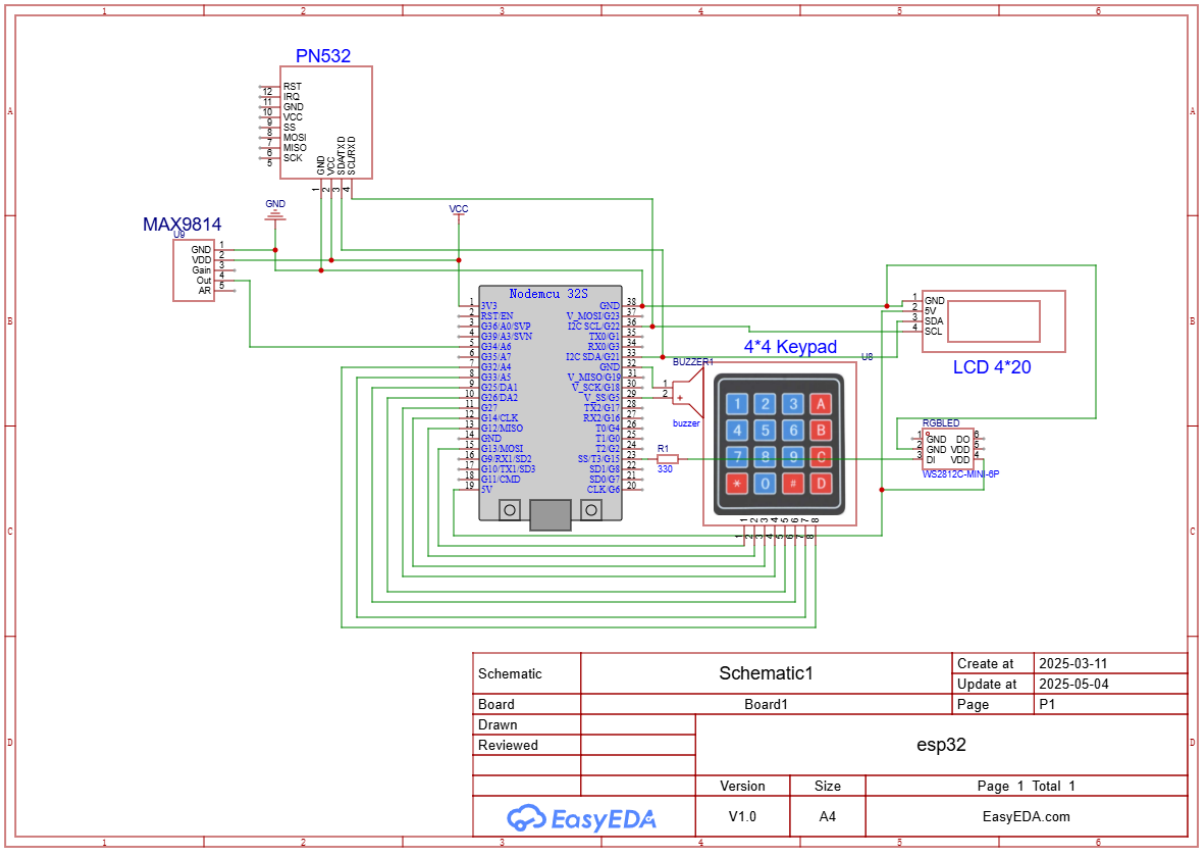

Fig 2: Hardware Wire connection

4.2 Software and App Development

The mobile app was developed using FlutterFlow and tested on Android devices. It includes features for:

- Secure user login with fingerprint or PIN
- Balance display and recharge using bank cards
- Ultrasonic payment transmission
- Transaction history

The app was connected to Supabase via its API and database services, ensuring real-time syncing of user balances and transaction logs. Offline handling was implemented so users could initiate payments while disconnected; these were flagged and re-synced when connectivity was restored.

Following figure 3 shows Sample screenshots of the FlutterFlow mobile application

fig 3.a: login page

fig 3.b: balance view

fig 3.c: Payment transaction

4.3 Backend and Local Server Deployment

The local server was implemented using Python and Flask, hosted on a Raspberry Pi within the campus network. It mirrored the logic of the Supabase /update endpoint and ensured consistent response handling.

The Supabase backend used PostgreSQL for structured data, Supabase Auth for login, and Supabase Functions for future automation (e.g., log cleanup, automated sync alerts). All transactions included fields such as timestamp, amount, UID, POS ID, and status.

4.4 System Testing and Results

Testing was conducted over a two-week period in both simulated and real-use scenarios. Results included:

- **Successful payment processing** using both NFC cards and ultrasonic signals.
- **Accurate PIN verification**, with transaction rejection on incorrect input.

- **Offline transaction reliability**, with queued requests syncing to cloud post-connection.
- **User feedback**: LCD messages and buzzer activation confirmed transaction outcomes in under 2 seconds.

4.5 Summary of Implementation Results

The system met its core objectives and operated reliably in both online and offline environments. Its modular architecture allowed flexible testing and troubleshooting. Each component functioned independently before full system integration.

The results validate that the Smart Wallet Card System is ready for a pilot deployment phase. It provides a strong technical foundation, improves user experience, and offers valuable data insights to administrators. Performance metrics were satisfactory, and no critical failures were reported during the testing window.

Chapter 5: Conclusion and Future Work

This chapter summarizes the outcomes of the Smart Wallet Card System project, highlights key findings, and outlines potential areas for future improvement and expansion.

5.1 Conclusion

The Smart Wallet Card System was successfully designed and implemented to address the limitations of traditional campus payment at the University of Baghdad. By integrating ESP32-based smart card hardware, a mobile app built with FlutterFlow, Supabase backend services, and a local offline-capable server, the system provides a comprehensive solution for digital transactions and ID verification.

The system achieved its primary objectives:

- Replaced cash payments with contactless NFC and ultrasonic transactions.
- Enforced secure PIN verification for higher-value transactions.
- Enabled offline operation with automatic cloud sync.
- Provided real-time feedback through LCD and buzzer.
- Delivered a scalable solution suitable for campus-wide deployment.

The combination of hardware reliability, mobile app usability, and backend integration resulted in a system that improves operational efficiency, user convenience, and data transparency. Testing confirmed that the system functions correctly in both online and offline scenarios, making it resilient in real-world conditions.

Compared to existing solutions surveyed in Chapter 2, this system improves on several limitations observed in prior research. Unlike traditional RFID or bank-tied NFC cards, the Smart Wallet Card supports both online and offline operations and incorporates dual-mode payment (NFC and ultrasonic), PIN-based verification, and a customizable cloud backend. It bridges the gaps between access control and micro-

payment systems, showing that open-source, low-cost components can deliver enterprise-level functionality in academic environments.

5.2 Future Work

Although the current system is fully functional, several enhancements can further improve its scalability, security, and versatility:

- **Biometric authentication**: Add fingerprint scanning to the wallet card for enhanced security.
- **Automated gate access**: Integrate with smart gates for automated student and staff entry in university gates.
- **Face or QR code recognition**: Use the mobile app to support visual or QR-based ID methods.
- **Expanded analytics dashboard**: Provide detailed insights into transaction trends, bus usage, and service popularity.
- **Modular expansion**: Extend to support features like class attendance tracking, library access, or lab entry.
- **Multiple campus deployment**: Adapt and deploy the system across other faculties or universities in Iraq.
- **Enhanced UI/UX**: Improve user interface responsiveness and accessibility within the mobile app.

These future directions aim to transform the Smart Wallet Card System into a core platform for smart campus services, reinforcing digital transformation and improving institutional performance.

In conclusion, this project demonstrated the feasibility of integrating embedded systems, cloud services, and mobile technology to solve real-world problems in a

university setting. It serves as a foundation for broader applications in educational institutions seeking to modernize their operational infrastructure.

References

1. Supabase Documentation. Retrieved from https://supabase.com/docs
2. Espressif Systems. "ESP32 Technical Reference Manual." Retrieved from https://docs.espressif.com/projects/esp-idf
3. FlutterFlow Documentation. Retrieved from https://docs.flutterflow.io/

Appendices

Appendix A: Functions for ESP32 Wallet Card Firmware

- void setup();
- void loop();
- void handleKeypadInput(char key);
- void resetSystem();
- void displayMessage(const String &message);
- void playBuzzer();
- String readUID();
- String readUltrasonicID();
- void processTransaction(String uid, int amount, String pin = "");
- bool sendToServer(String uid, int amount, String pin);
- void showTransactionResult(String status);

Appendix B: /update Endpoint Example POST /update

```
{
  "uid": "04A3B2C1D0",
  "amount": 1500,
  "PIN": "1234"
}
```

Response:

```
{
  "status": "success",
  "message": "Payment completed."
}
```

Arabic Abstract and Title Page

العنوان: نظام البطاقة الذكية للدفع والتعريف داخل جامعة بغداد

الملخص:

يعالج نظام البطاقة الذكية للدفع القيود الموجودة في أساليب الدفع والتعريف التقليدية في جامعة بغداد. يعتمد الطلاب والموظفون حاليًا على النقد لوسائل النقل والخدمات داخل الحرم الجامعي، بالإضافة إلى التحقق اليدوي من الهوية عند البوابات، مما يسبب تأخيرات وعدم كفاءة.

يقدم هذا المشروع نظامًا آمنًا وسهل الاستخدام يدمج بطاقات ذكية تعتمد على ESP32 **وتقنية**NFC ، **بالإضافة إلى إشارات فوق صوتية وتطبيق موبايل مبني باستخدام** FlutterFlow **مع** Supabase **كنظام خلفي. يتيح النظام إجراء دفعات غير تلامسية والتحقق الرقمي من الهوية، مع إدخال رمز** PIN **للدفعات ذات القيمة العالية.**

يدعم خادم محلي التشغيل دون اتصال ويزامن البيانات مع السحابة عند توفر الاتصال. يعالج النظام الدفعات عبر نقطة نهاية واحدة باسم update/ **تقوم بالتحقق من البيانات وتحديث الأرصدة. أظهرت الاختبارات نجاح النظام في بيئات الاتصال والانفصال، مع فرض دقيق لسعة الحافلات، وتوفير تغذية راجعة فورية عبر شاشة** LCD **وجهاز تنبيه.**

يحسن هذا الحل الكفاءة ويقلل من الاحتيال ويعزز تجربة المستخدم داخل الحرم الجامعي. يتيح تصميمه المعياري تكاملات مستقبلية مثل الوصول الآلي للأبواب وتتبع الحضور. يمثّل هذا المشروع أساسًا لحلول الحرم الجامعي الذكي في العراق ومناطق تعليمية مشابهة حول العالم.